Instructions for Assembly and Operation of the NixieCroN LED-TUBE-ESP-Clock

Please unpack all components.

The following parts are included in the kit:

- 1 x electronic board
- 1 x acrylic base body, semicircular with 8 holes
- 8 x transparent plastic tubes

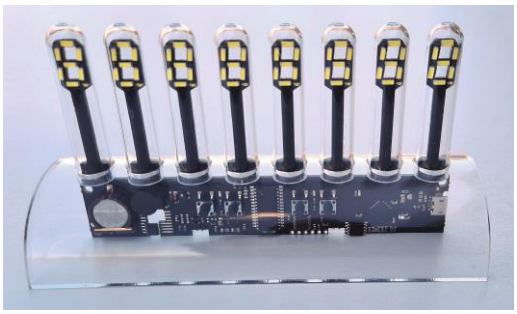

Tips for the Assembly:

IMPORTANT! Firstly, put the eight plastic tubes on the displays of the electronics board with a little pressure; please do **NOT** turn them around in the process! Otherwise the surface could get scratched. Then slide the electronics board with the attached tubes into the acrylic base body from below.

The acrylic parts are laser-cut. Due to that the parts partly come with protective foils which should be removed before the assembly. These protective films prevent the parts from being burned which can occur during production. Only after removing the protective film the acrylic parts are clean and transparent. Throughout the whole assembly no tools are needed.

Cleaning:

Fingerprints or dust on the acrylic basic body can be removed with a clean microfiber cloth. **Please do NOT use alcohol or spirit as a cleanser. That destroys the acrylic pane immediately!** If cleansers are used it should only be plastic cleaner without alcohol and without solvents.

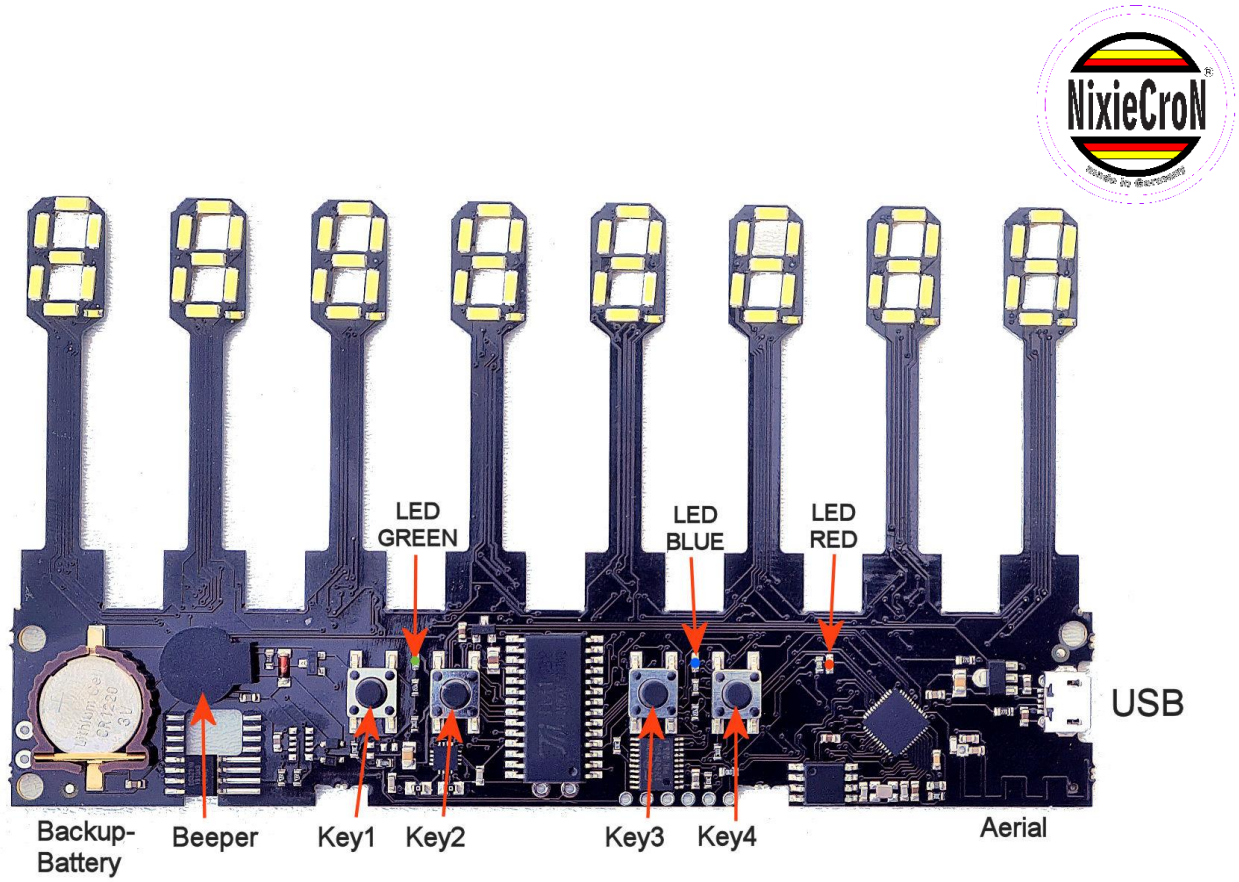

LED-BASIC:

The operating system of the LED TUBE Clock is based on LED-BASIC. The very efficient 32-bit ARM-Cortex controller which is used on the electronics board enables the fast processing of the BASIC codes with about 10.000 lines per second. The inspiration of LED-Basic was the Basic Interpreter by Adam Dunkel. Due to the outsourcing of the tokenizer to the PC with a token code that we developed as well as the addition of LED and IO routines we created an almost completely new interpreter. With LED-BASIC we can change, modify, and adjust the complete NixieCroN system. LED-BASIC is freeware and very easy to learn. You can download the LED-BASIC Editor and the manual as a PDF on the LED-Genial website (Link at the end of this manual).
Please note that the editor is **exclusively** suitable for Windows. Windows 7 or 10/11 are recommended.

Power Supply:

The LED-Tube Clock needs 5 volts of voltage for operation. The power supply is provided via the micro-USB port on the electronics board. Smartphone power adapters, USB power bank or USB ports of PCs, notebooks, or USB hubs can be used.

Operation of the Clock:

The software is developed constantly. Hence the recommendation to look up the current manual at the Basic-Code.

- please download and install the LED-BASIC Editor
- in the menu “Settings” select and tick the LED-Tube Clock
- open the menu “File” and select the software with the highest version number
- if you wish: upload this version to the LED-Tube-Clock

The current manual can be found at the beginning of the source code.

The latest version and the manual (pdf file) can also be downloaded on the LED-Genial website (link at the end of the manual).

Time Synchronization:

The LED-TUBE-ESP comes with a WLAN receiver, can make contact with the WLAN router at home and receive the current time. Please use the LED-BASIC Editor to configure the access data. If there is no WLAN router available the clock gets controlled via the integrated RTC component and its settings can be changed with the LED-BASIC Editor or directly via the buttons of the clock.

ESP Device Configuration

Start the current version of the LED-Basic programming software (v15.3.0 or higher).

Select component “[3450] LED-Tube-ESP” and then select the associated COM port.

Open the ESP device configuration with the red button.

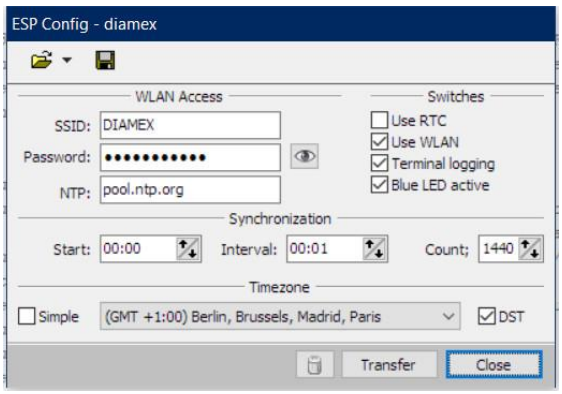

Wi-Fi Access Data	
SSID	“Service Set Identifier”, name of the WLAN router which is to provide the time data (32 characters max.) **Please pay attention to upper and lower case!**
Password	Password for the access to the WLAN router (63 characters max.) **Please pay attention to upper and lower case!**
NTP	URL of the NTP time servers (Standard = pool.ntp.org)
Switch	
Use WLAN	Use WLAN connection for time synchronization.
Use RTC	Use real time clock to synchronize the time. If “Use WLAN“ and “Use RTC“ are selected, the program first attempts to load the current time via WLAN. If that does not work, the time is loaded from the real time clock.
Terminal logging	Status reports for WLAN connections and time synchronization are output via the LED-Basic terminal.
blue LED active	Switch the blue LED for WLAN connection status on/off
Synchronization	
Sync-Start	Point of time for the first synchronization between WLAN and clock or between RTC chip and clock.
Sync-Interval	Time interval between the synchronizations in hours and minutes
Sync-Count	Number of synchronizations per day Examples: Sync-Time = 1:00, Sync-Interval = 1:00, Sync-Count = 4, From the starting time 1:00 o’clock onwards the clock gets synchronized and then 4 times an hour altogether. Sync-Time = 0:00, Sync-Interval = 0:05, Sync-Quantity = 288, From the starting time 0:00 o’clock onwards the clock gets synchronized and then all day long every five minutes.
Time Zone	
Simple/Expert	Change between simple mode and expert mode for setting the time zone.
List	Available in simple mode only. The time zone gets keyed in as the difference to the UTC/GMT. Standard: GMT+1 for Germany / Central Europe
DST	Available in simple mode only. Activate or deactivate whether the clock switches from summer time to winter time automatically (daylight saving time). This is not available for all time zones.
Timezone posix	Available in expert mode only. Here exotic time zones or summer and winter times that deviate from the European norm can be entered. More information about timezone posix: https://www.gnu.org/software/libc/manual/html_node/TZ-Variable.html

Links

LED-Basic website
http://www.led-basic.de

LED-Genial shop (LED-BASIC download)
http://www.led-genial.de

Diamex shop
http://www.diamex.de

µBasic by Adam Dunkel
http://dunkels.com/adam/ubasic/

Unsere Hinweispflicht nach dem Batteriegesetz

Im Zusammenhang mit dem Vertrieb von Batterien oder mit der Lieferung von Geräten, die Batterien enthalten, ist der Verkäufer verpflichtet, Sie auf Folgendes hinzuweisen:

Altbatterien gehören nicht in den Hausmüll.

Sie sind zur Rückgabe gebrauchter Batterien als Endnutzer gesetzlich verpflichtet. Sie können Batterien an den Verkäufer oder in den dafür vorgesehenen Rücknahmestellen (z.B. in kommunalen Sammelstellen oder im Handel) unentgeltlich zurückgeben. Sie können die Batterien auch per Post an den Verkäufer zurücksenden.

Schadstoffhaltige Batterien sind mit einem Zeichen, bestehend aus einer durchgestrichenen Mülltonne und dem chemischen Symbol (Cd, Hg oder Pb) des für die Einstufung als schadstoffhaltig ausschlaggebenden Schwermetalls versehen:

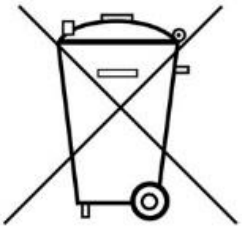

„**Cd**" steht für Cadmium.
„**Hg**" steht für Quecksilber.
„**Pb**" steht für Blei.

DISTRIBUTION

DIAMEX Produktion und Handel GmbH

Innovationspark Wuhlheide
Köpenicker Straße 325, Haus 41
12555 Berlin
GERMANY

Phone: +49-30-65762631
E-Mail: info@diamex.de
Website: http://www.diamex.de

MANUFACTURER

www.tremex.de
Köpenicker Str. 325 12555 Berlin
Tel.030-65762631
Hersteller: Tremex GmbH
DIAMEX * OBD-DIAG * TREMEX
WEE-Reg.Nr. DE 51673403